TRTD-130 POOL RAIL

SĀFTRON POOLS AND SAFETY RAILS

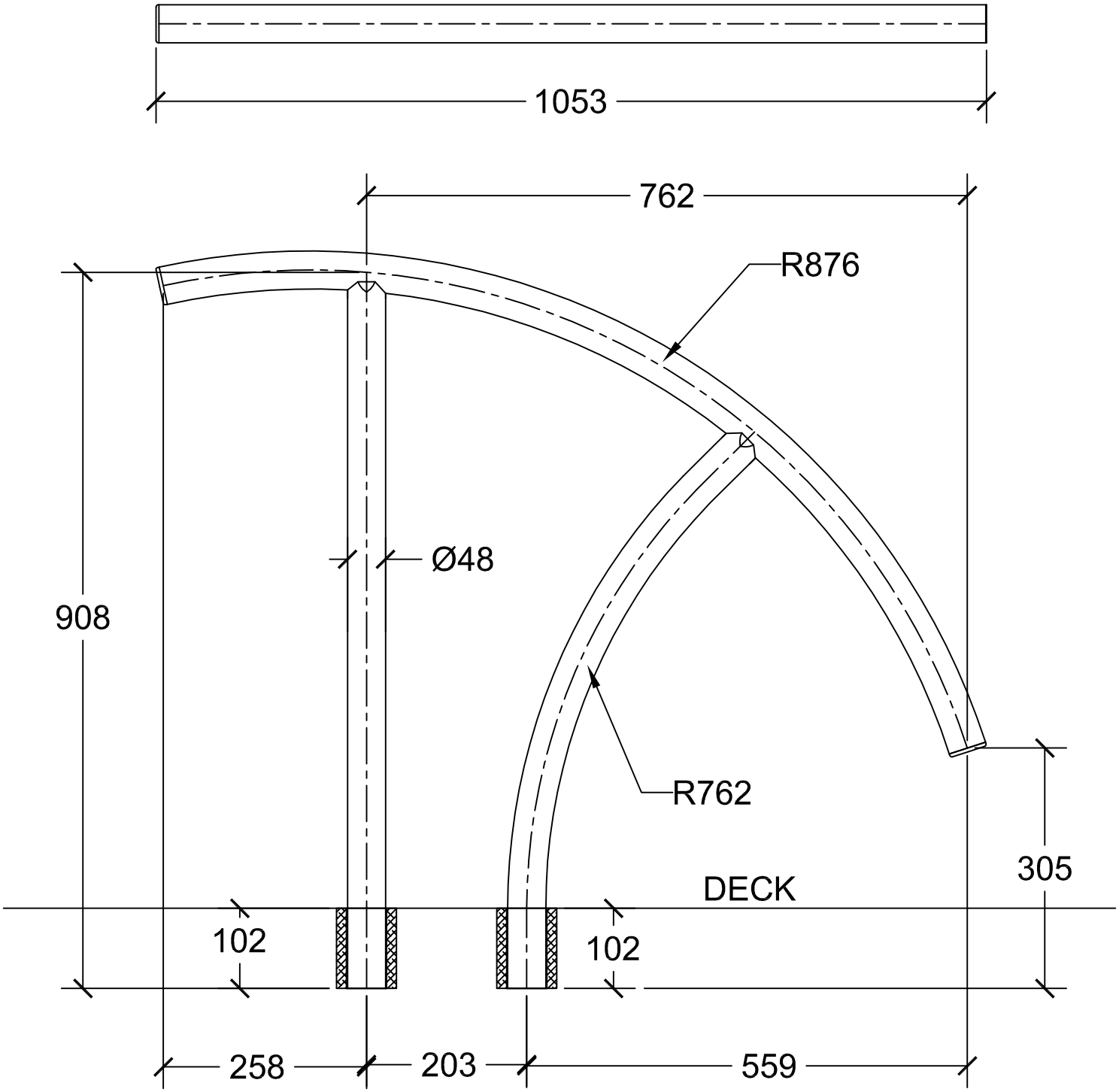

ALL DIMENSIONS ARE IN mm

SĀFTRON BY AQUATIC ELEMENTS

Aquatic Elements P/L
2 Hayter Street
Currumbin QLD 4223
Phone: 07-5534 3136 | Fax: 07-3259-8519
Website: www.aquaticelements.com.au

SERIES: TRTD-130 RETURN TO DECK CURVED POOL RAIL

PROJECT: SAFTRON-TRITON SERIES

APPROVED BY:

DATE:

QTY: | COLOR:

ISSUED : 11/01/2017

SCALE : NTS

DRAW. NO. TRTD-130