P-324-L3 POOL LADDERS

SĀFTRON POOLS AND SAFETY RAILS

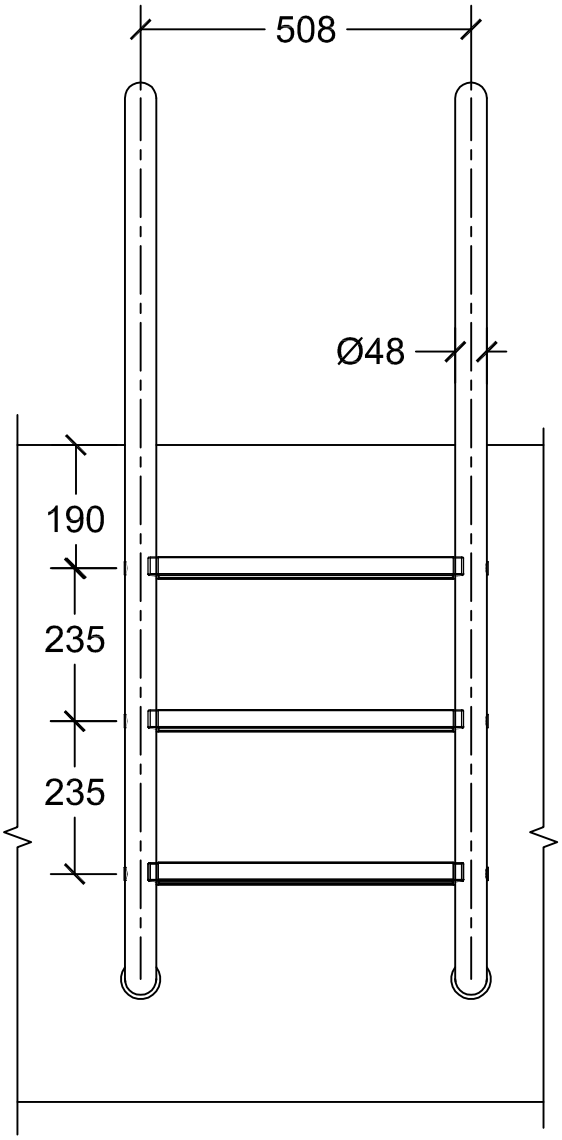

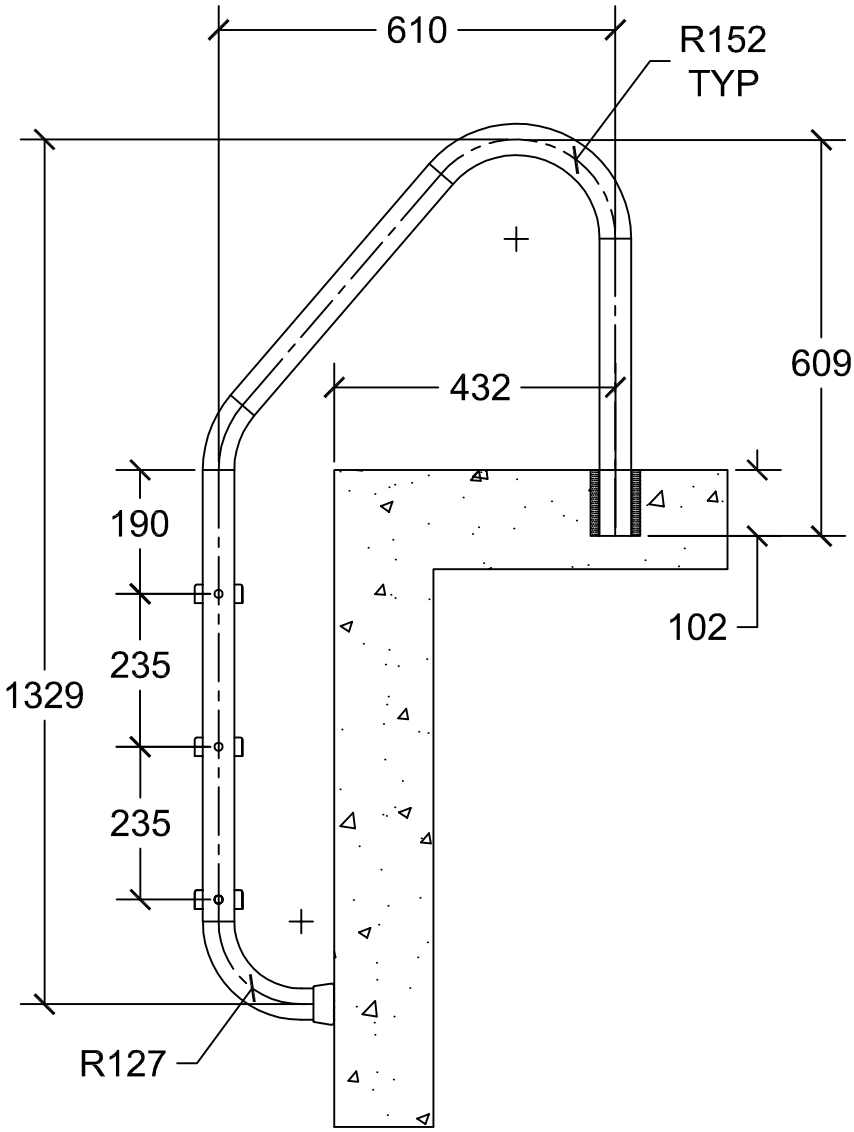

ALL DIMENSIONS ARE IN mm

t:\saftron\cad files\cad copy 09031\drawing\03_catalog_pool rails\pool ladders\p-324-l3.dwg

SĀFTRON BY AQUATIC ELEMENTS

Aquatic Elements P/L
2 Hayter Street
Currumbin QLD 4223
Phone: 07-5534 3136 | Fax: 07-3259-8519
Website: www.aquaticelements.com.au

SERIES: P-324-L3

PREPARED BY: MATT FLUEHMANN

APPROVED BY:

PROJECT :

QTY: | COLOR:

ISSUED : 10/31/2017

SCALE : NTS

DRAW. NO. P-324-L3